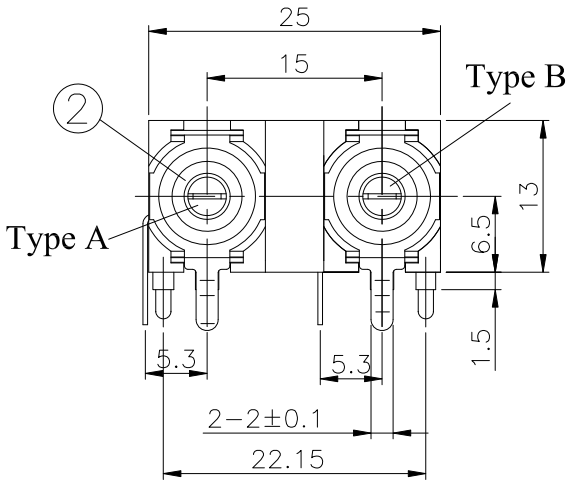

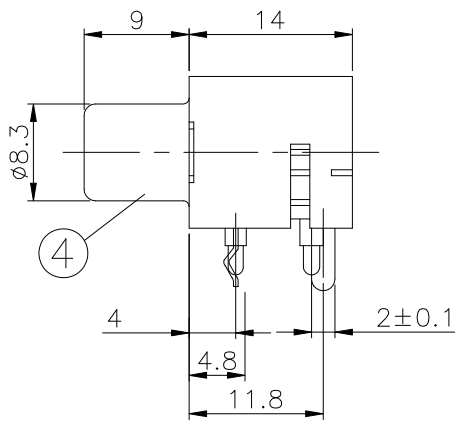

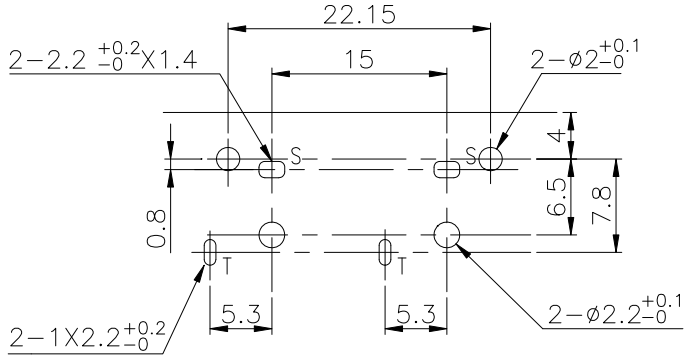

T:1.6 Dimensions of PC board holes

Tolerance : ±0.1(Printed−side view)

工程課
108.06.03
確認

CSCR-3227VXB - X X

Part No.

TYPE A
R:Red(紅)
Y:Yellow(黃)
W:White(白)
B:Black(黑)

TYPE B
R:Red(紅)
Y:Yellow(黃)
W:White(白)
B:Black(黑)

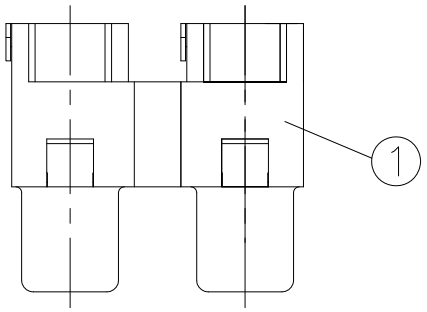

Model No.	CSCR−3227VXB−XX
Schematic	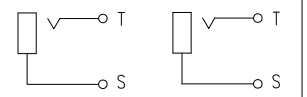

NO.	DESCRIPTION	QTY	MATERIAL	COLOR	REMARK
4	OUTER CONTACT	2	C2680 T=0.4	———	MB:Cu Cu/Sn PLATED
3	TERMINAL	2	C2680 T=0.45	———	MB:Cu Cu/Sn PLATED
2	WASHER	2	PBT 4815	———	UL−94V0
1	HOUSING	1	PBT 4815	BLACK	UL−94V0

承洧科技股份有限公司
Cherng Weei Technology Corp.

DESCRIPTION(內容): RCA JACK 90° 紅黃白黑 (RoHS)	DRAWN(製圖): HUANG	GENERAL TOLERANCE: (公差) X ±0.50, X.X ±0.30, X.XX ±0.25	REV: R0	REV	DESCRIPTION	DATE
PART NO: (料號) CSCR-3227VXB-XX	CHECKED(確認): TERESA		UNIT: mm	R0		2019.06.03
DWG NO(圖號): SCR-3227VXB	APPROVAL(核准): JOHNNY	SCALE(比例): FREE	SIZE: A4	R1		
			SHEET: 1/1	R2		
				R3		

CF1165